Serial NO.	FM3-45400-2
Drawing NO.	01/A

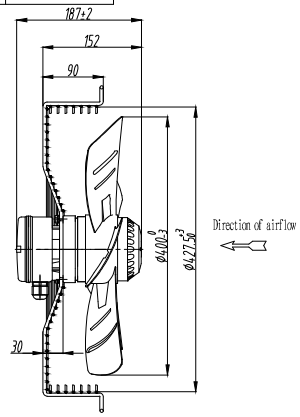

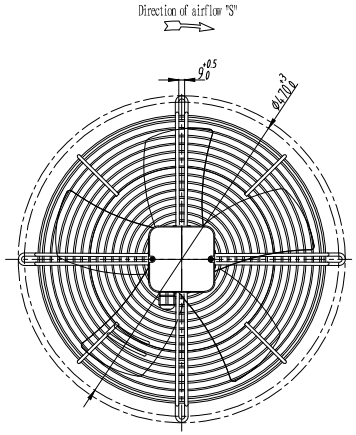

Label:

P/N:FM3-45400-2
4 Poles ,5 Blades,400MM
1625RPM,230V/1PH/60Hz

Wiring Diagram:

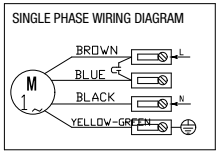

(Airflow-static pressure curve):

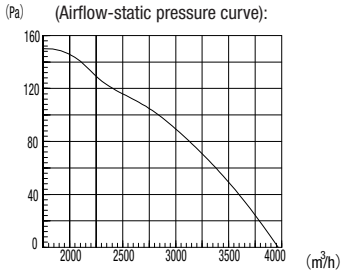

St. P.	Air Flow	Speed	Votage	Freq.	Current	Power
Pa	m3/h	RPM	V	Hz	Amp	W
0	3968	1643	230	60	1.29	294
25	3753	1622	230	60	1.35	308
50	3501	1600	230	60	1.41	320
71	3250	1589	230	60	1.44	327
90	3000	1578	230	60	1.47	332
106	2748	1565	230	60	1.49	338
116	2499	1542	230	60	1.55	351
126	2253	1539	230	60	1.55	351
150	2002	1452	230	60	1.7	383
150	1753	1310	230	60	1.89	419

Axial Fan

Partname: FM3-45400-2 Axial Fan

Insulation class: B | Protection Class: IP54 | Type of Duty: S1

Permissible ambient temperature: -40 ~ +60℃

Approvals: CE CCC XK06-015-01393

Nomenclature:

Model: YWF 4 E 400
- 400 — Propeller Diameter
- E — D:Three-Phase E:Single-Phase
- 4 — Number of Motor Pole:4 Pole
- YWF — External Rotor Fan Motor

Feature Code: S E 5 L
- L — Blade Shape: L Sickle-Shaped
- 5 — Quantity of Blade:5
- E — Installation Form: Standard grid
- S — Airflow direction: B:Blowing S: Sucking

High -Voltage test according to EN 60335-1 2100V

Material/Surface Finishing: Blade-spec steel sheet/Black powder coating
Rotor-Silicon sheet Lamination with aluminum casting/ Black poweder coating
Guard grill- cold drawn steel wire/Black powder coating

Balance Grade:G6.3 (Propeller is dynamic balanced at two sides)

Model	Feature Code	Voltage	Frequency	Current	Power input	Speed	Capacitance	Air flow/max	Max.static pressure	N.W.	Noise
		V	Hz	A	W	r/min	μF	m³/h	Pa	Kg	dB(A)
FM3-45400-2	S-E5L.2AAB.032	230	60	1.05	225	1625	5	3935	105	5.2	70

	Sign	Date
DRN BY		2019.07.03
CHK BY		2019.07.03
APVD BY		2019.07.03

everwell®

Specification

L400S-4E2.E-01